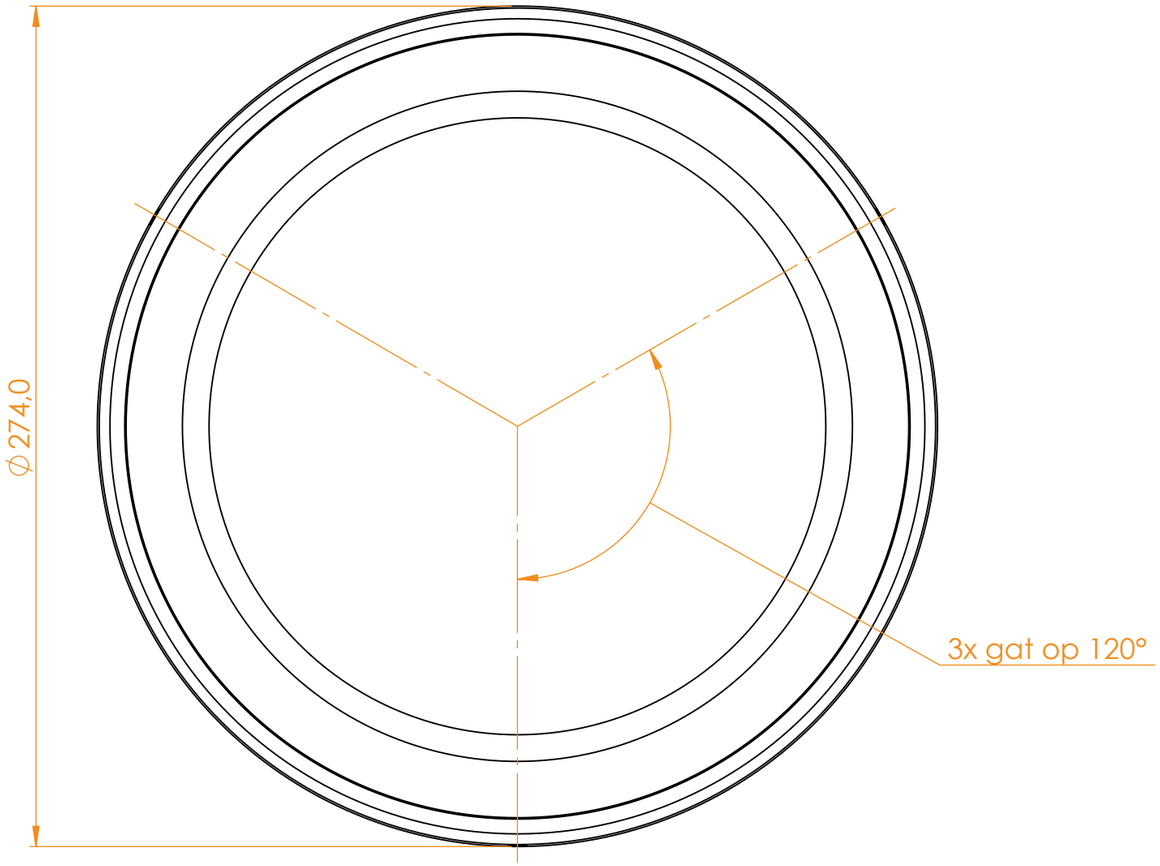

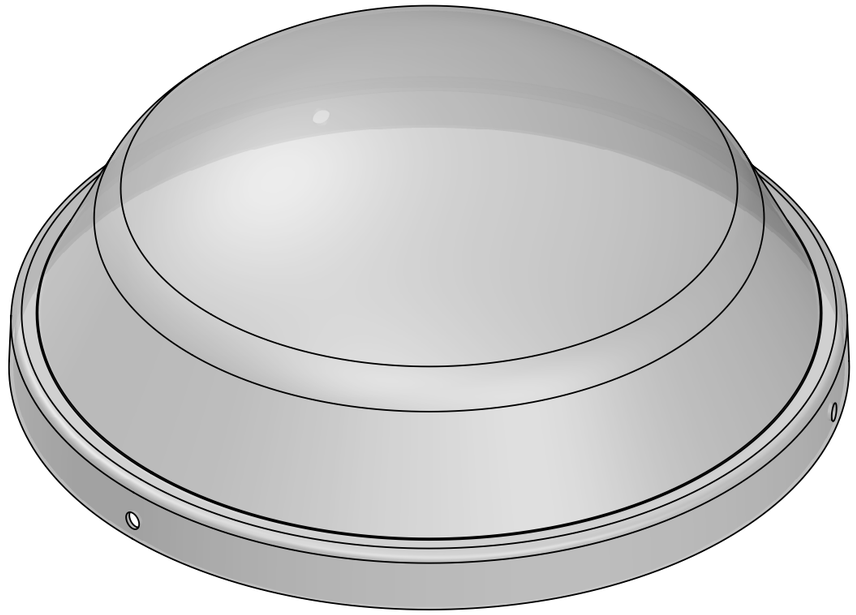

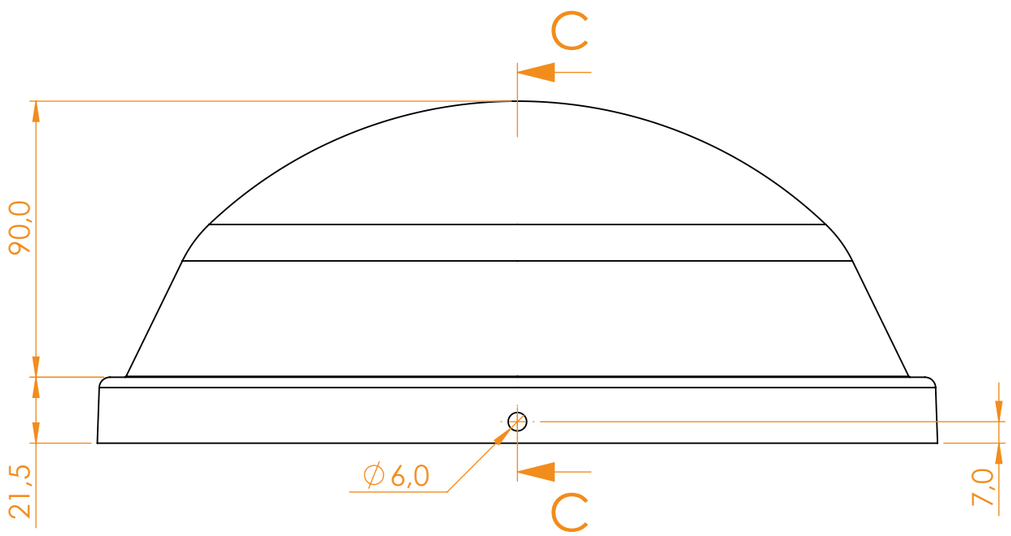

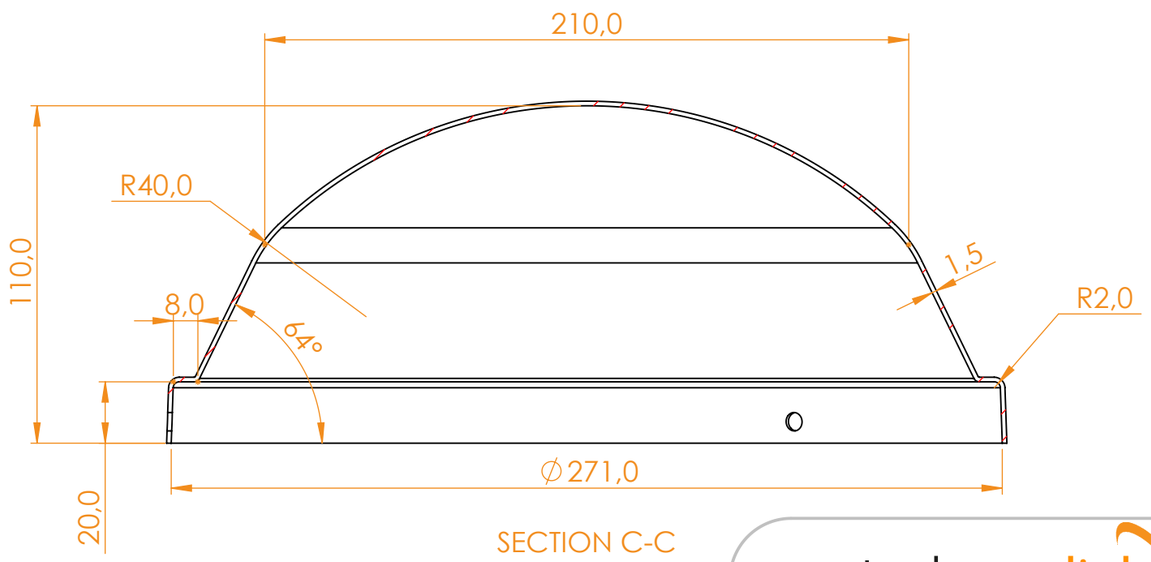

SECTION C-C

techcomlight
the daylight professional
Techcomlight BV - Veldhuizerweg 12 - 6741 HH Lunteren
T +31 (0) 318 693 820 - www.techcomlight.com

TITLE:	P416250-25 - Powerdaylight Ø25cm Koepel		
DRAWN BY: TvD		REVISION	15-10-2024
MATERIAL:	Makrolon PC UV		
SCALE: 1:2		A3	SHEET 1 OF 1